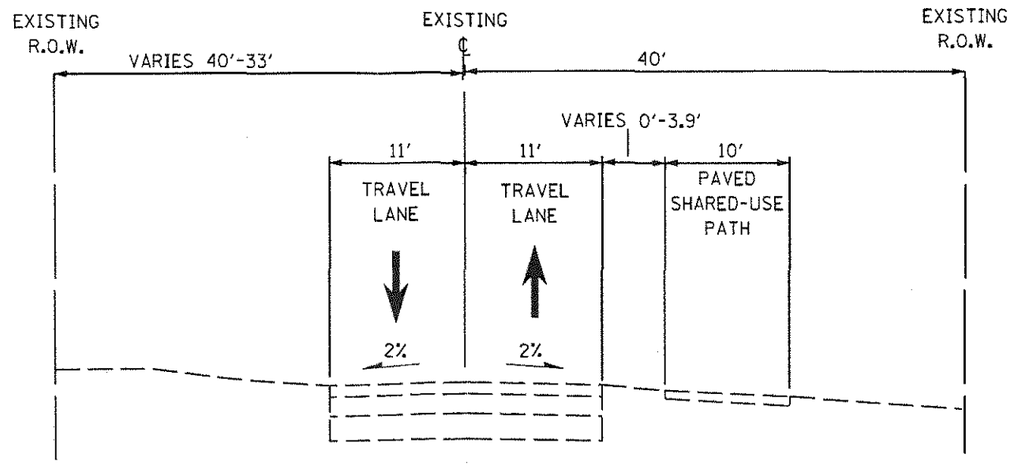

HIGHLAND AVENUE EXISTING TYPICAL CROSS SECTION

STATION 10+50 TO 12+75

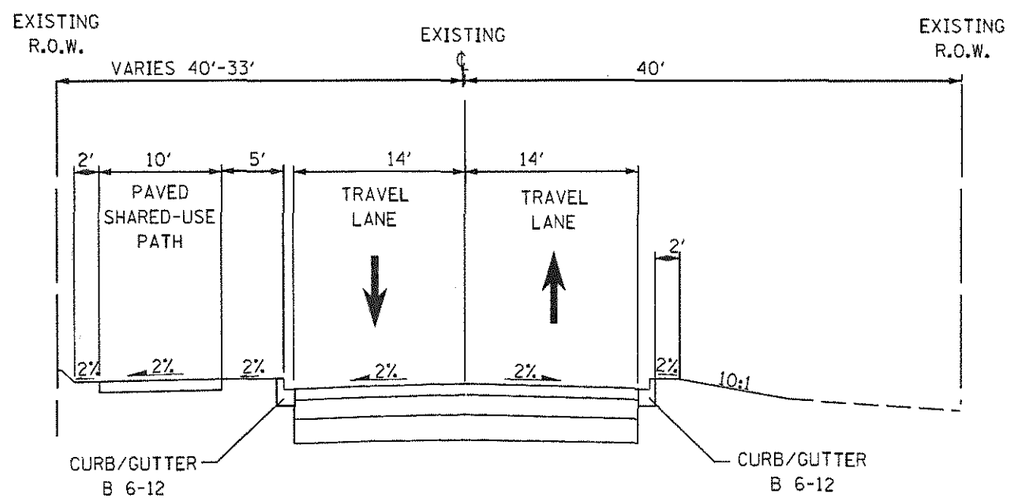

HIGHLAND AVENUE PROPOSED TYPICAL CROSS SECTION

STATION 10+50 TO 12+75

CHRISTOPHER B. BURKE ENGINEERING, LTD.
9575 W. Higgins Road, Suite 600
Rosemont, Illinois 60018
(847) 823-0500

CLIENT: VILLAGE OF ALGONQUIN

NO.	DATE	NATURE OF REVISION	CHKD.

FILE NAME: ...\ALGONQUIN\070273\070273.00040\Civil\070273_40.01-alt1-typical.dgn

DSGN.	
DWN.	
CHKD.	
SCALE:	12'
PLOT DATE:	1/20/2015
CAD USER:	psanios
MODEL:	Default

TITLE: HIGHLAND AVENUE EXISTING AND PROPOSED TYPICAL SECTIONS

PROJ. NO.
DATE:
SHEET OF
DRAWING NO. E-2.2a

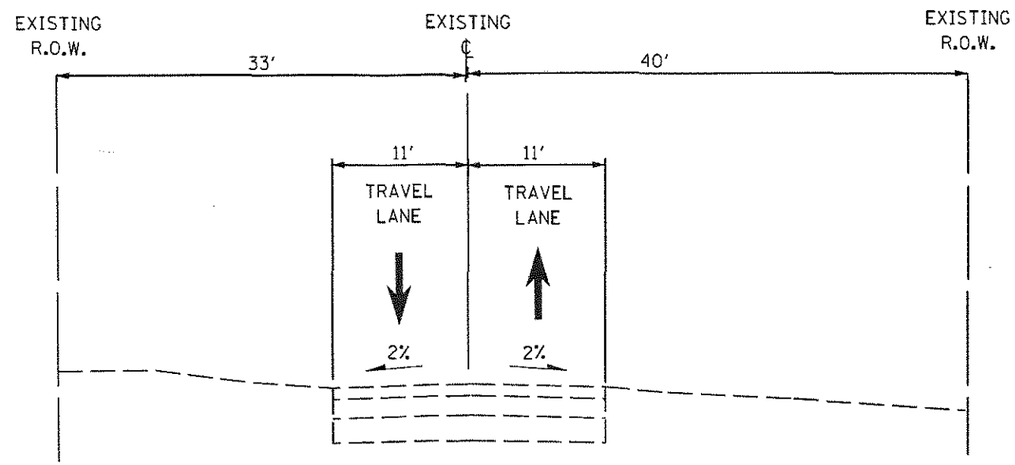

HIGHLAND AVENUE EXISTING TYPICAL CROSS SECTION

STATION 12+75 TO 16+63
STATION 19+99 TO 22+65

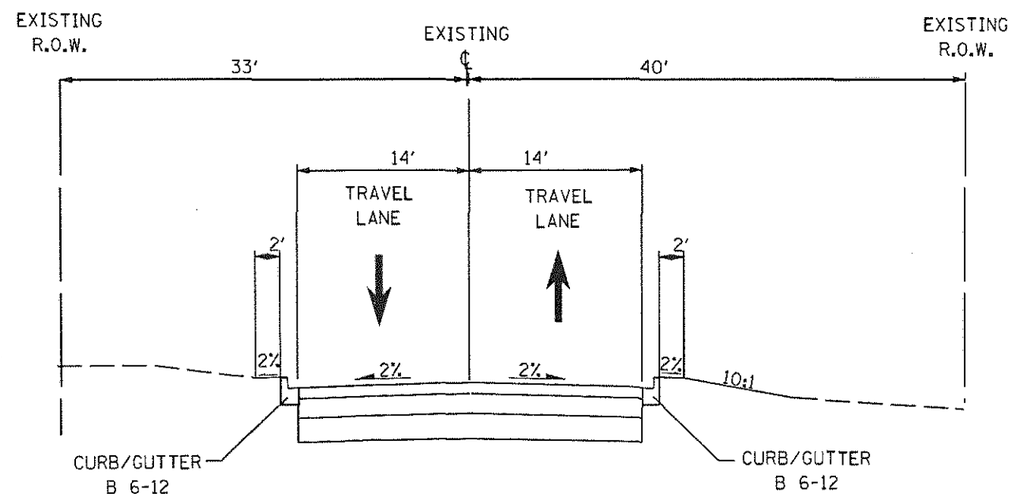

HIGHLAND AVENUE PROPOSED TYPICAL CROSS SECTION

STATION 12+75 TO 16+63
STATION 19+99 TO 22+65

CHRISTOPHER B. BURKE ENGINEERING, LTD.
9575 W. Higgins Road, Suite 600
Rosemont, Illinois 60018
(847) 823-0500

CLIENT: VILLAGE OF ALGONQUIN

NO.	DATE	NATURE OF REVISION	CHKD.

FILE NAME: W:\ALGONQUIN\070273\070273.000040\Civil\070273_40_02-sht-typical.dgn

DSGN.	
DWN.	
CHKD.	
SCALE:	12'
PLOT DATE:	1/20/2015
CAD USER:	psantos
MODEL:	Default

TITLE: HIGHLAND AVENUE EXISTING AND PROPOSED TYPICAL SECTIONS

PROJ. NO.
DATE:
SHEET OF
DRAWING NO. E-2.2b

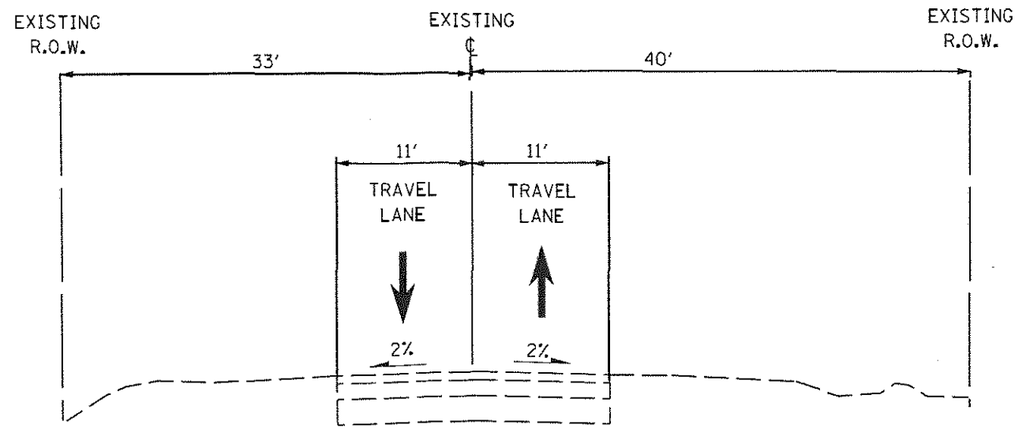

HIGHLAND AVENUE EXISTING TYPICAL CROSS SECTION

STATION 16+63 TO 19+99
STATION 22+63 TO 24+79
STATION 41+20 TO 43+00

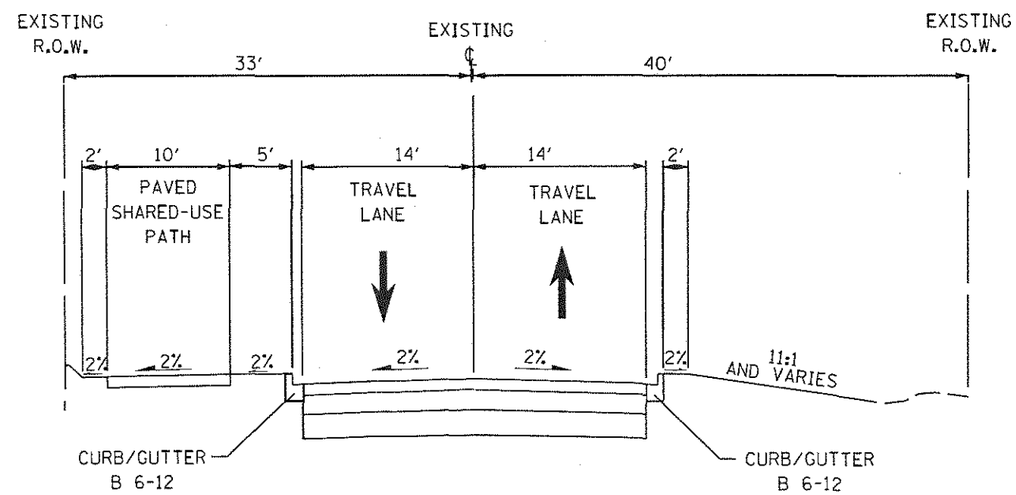

HIGHLAND AVENUE PROPOSED TYPICAL CROSS SECTION

STATION 16+63 TO 19+99
STATION 22+63 TO 24+79
STATION 41+20 TO 43+00

CHRISTOPHER B. BURKE ENGINEERING, LTD.
9575 W. Higgins Road, Suite 600
Rosemont, Illinois 60018
(847) 823-0500

CLIENT: VILLAGE OF ALGONQUIN

NO.	DATE	NATURE OF REVISION	CHKD.

FILE NAME: N:\ALGONQUIN\070273\070273.00040\Civil\070273_40_03-sht-typical.dgn

DSGN.	
DWN.	
CHKD.	
SCALE:	12'
PLOT DATE:	1/20/2015
CAD USER:	psantos
MODEL:	Default

TITLE: HIGHLAND AVENUE EXISTING AND PROPOSED TYPICAL SECTIONS

PROJ. NO.
DATE:
SHEET OF
DRAWING NO. E-2.2c

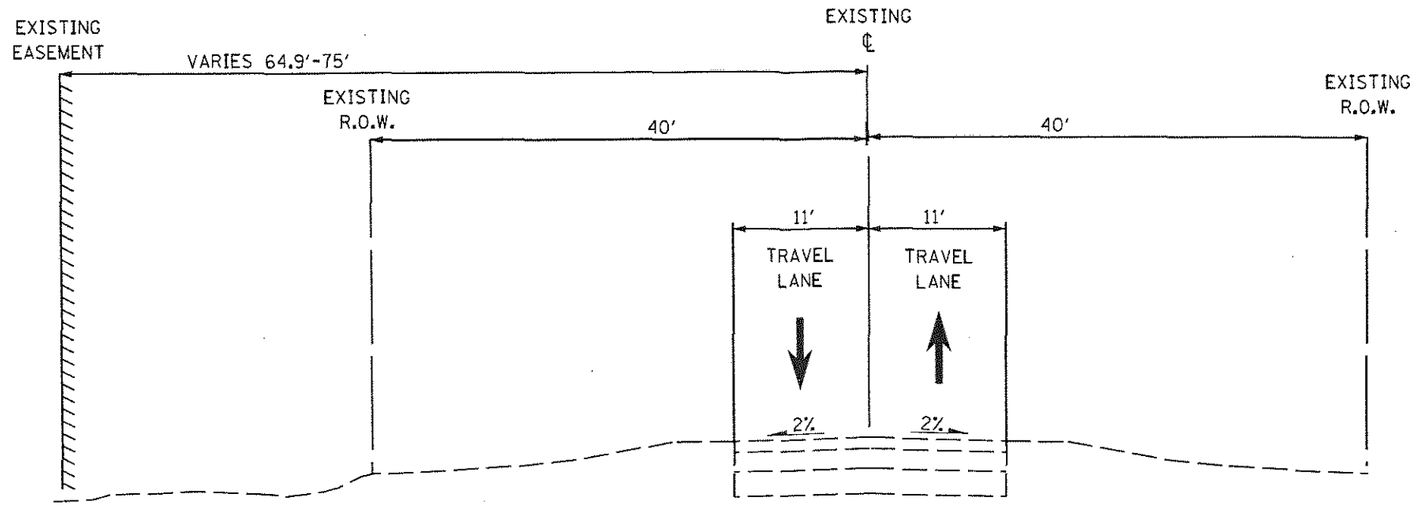

HIGHLAND AVENUE EXISTING TYPICAL CROSS SECTION

STATION 24+79 TO 41+20

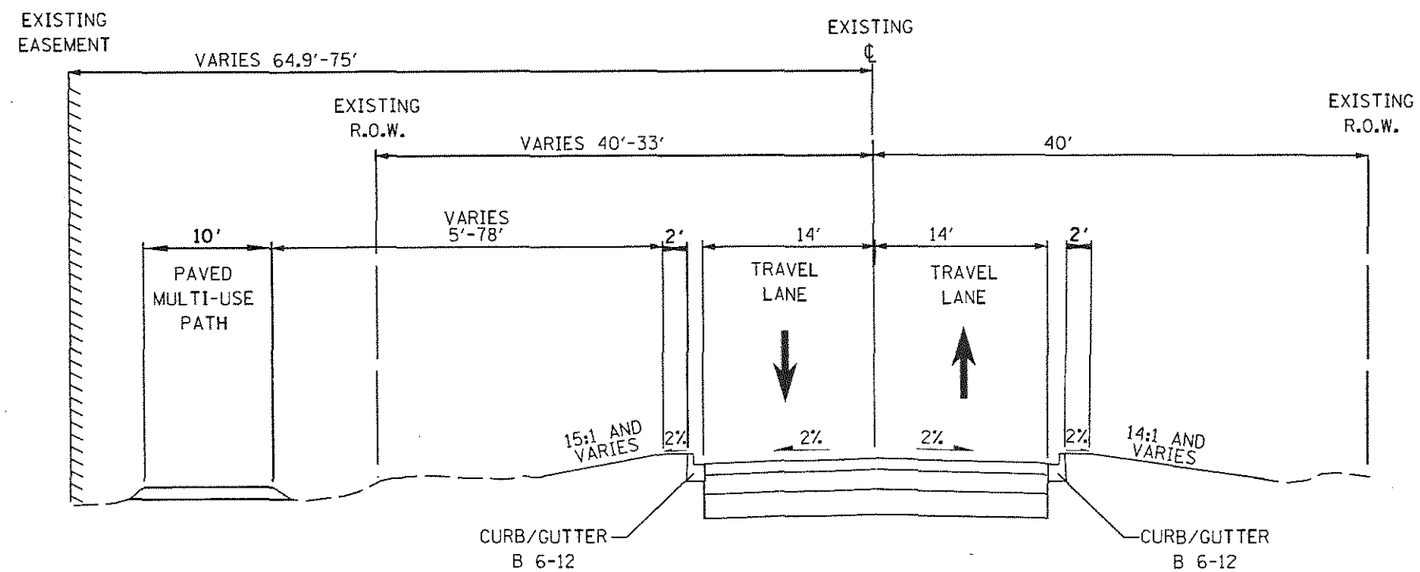

HIGHLAND AVENUE PROPOSED TYPICAL CROSS SECTION

STATION 24+79 TO 41+20

CHRISTOPHER B. BURKE ENGINEERING, LTD.
9575 W. Higgins Road, Suite 600
Rosemont, Illinois 60018
(847) 823-0500

CLIENT: VILLAGE OF ALGONQUIN

NO.	DATE	NATURE OF REVISION	CHKD.

FILE NAME: [illegible]

DSGN.	
DWN.	
CHKD.	
SCALE:	12'
PLOT DATE:	1/20/2015
CAD USER:	psantos
MODEL:	Default

TITLE: HIGHLAND AVENUE EXISTING AND PROPOSED TYPICAL SECTIONS

PROJ. NO.
DATE:
SHEET OF
DRAWING NO. E-2.2d

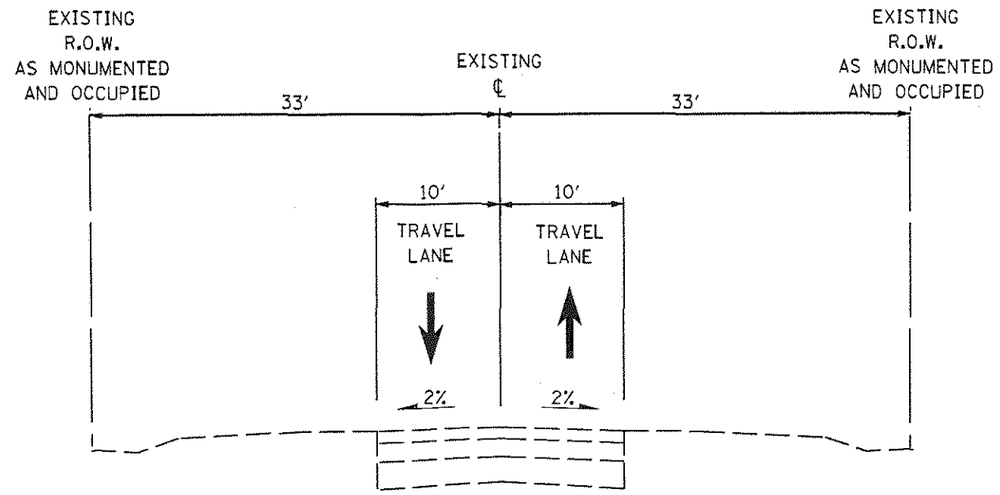

HIGHLAND AVENUE EXISTING TYPICAL CROSS SECTION

STATION 43+00 TO 55+38

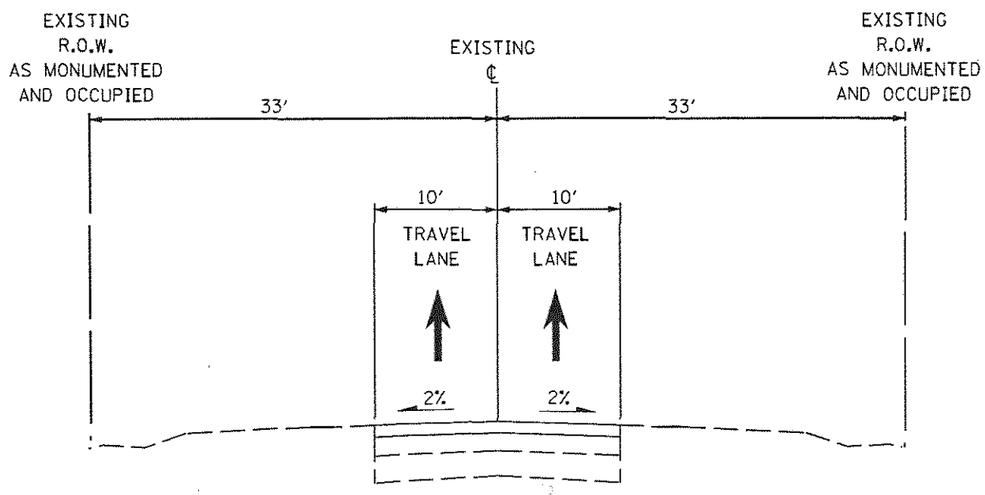

HIGHLAND AVENUE PROPOSED TYPICAL CROSS SECTION

STATION 43+00 TO 55+38

CHRISTOPHER B. BURKE ENGINEERING, LTD.
9575 W. Higgins Road, Suite 600
Rosemont, Illinois 60018
(847) 823-0500

CLIENT:

VILLAGE OF ALGONQUIN

NO.	DATE	NATURE OF REVISION	CHKD.

FILE NAME: ln:\ALGONQUIN\070273\070273.00040\Civil\070273.40.05-sht-typicals.dgn

DSGN.	
DWN.	
CHKD.	
SCALE:	12'
PLOT DATE:	1/20/2015
CAD USER:	psantos
MODEL:	Default

TITLE:

HIGHLAND AVENUE EXISTING AND PROPOSED TYPICAL SECTIONS

PROJ. NO.
DATE:
SHEET OF
DRAWING NO.
E-2.2e

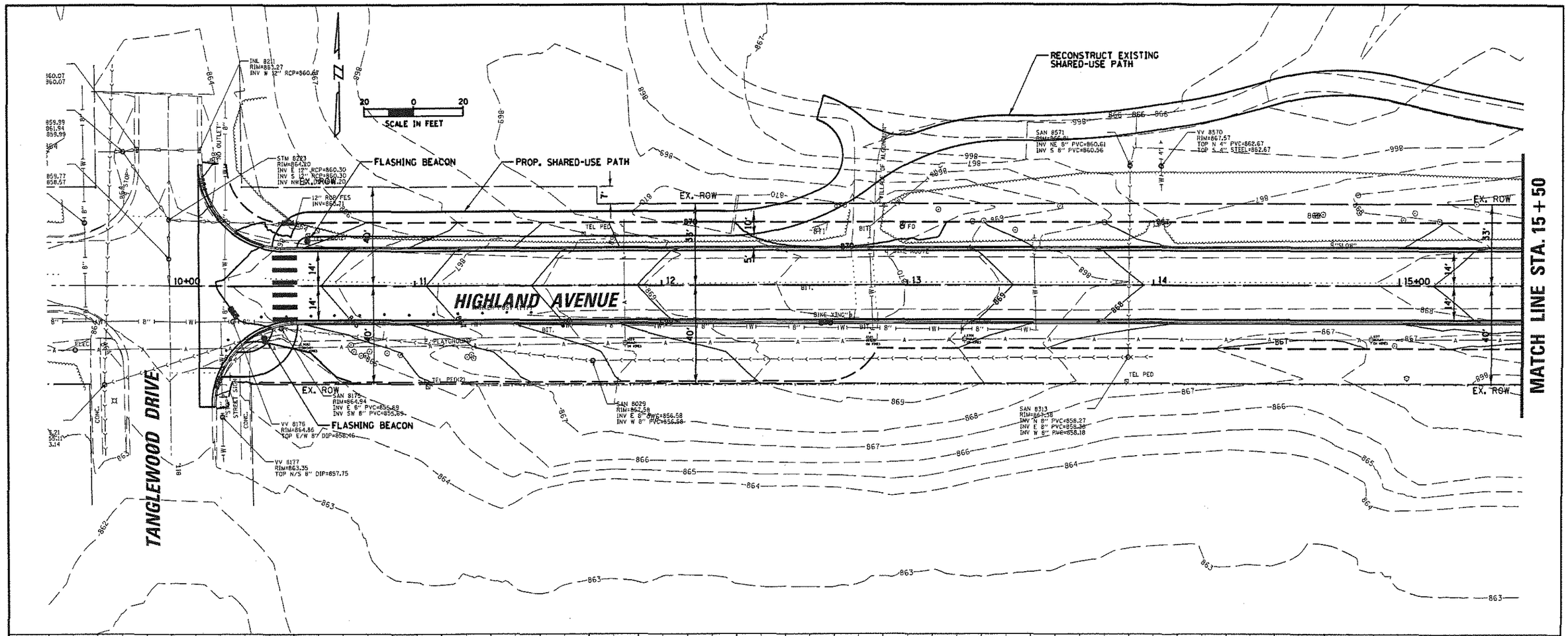

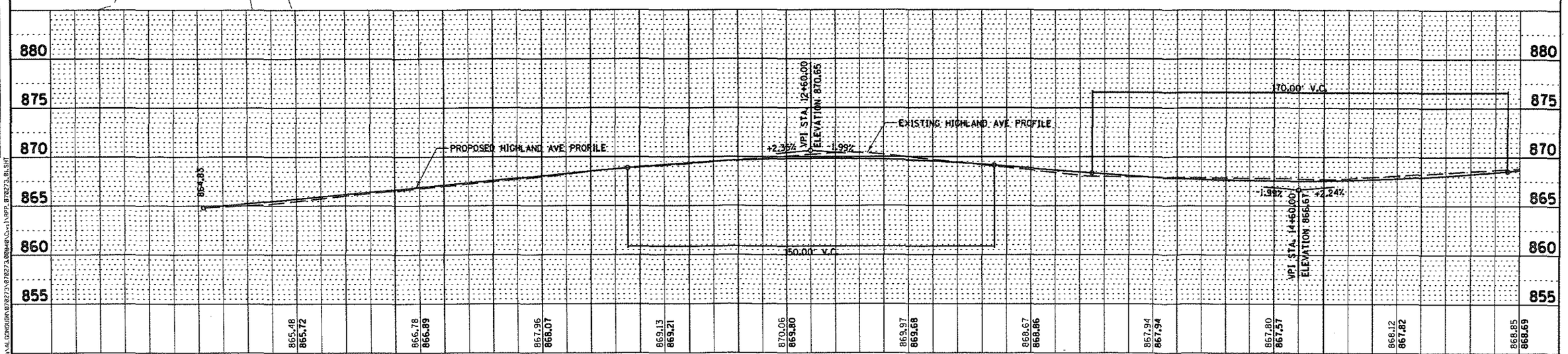

PLAN
SURVEYED
PLOTTED
ALIGNMENT CHECKED
RT. OF WAY CHECKED
NOTE BOOK
NO.
PADD FILE NAME
BY
DATE

PROFILE
SURVEYED
PLOTTED
GRADES CHECKED
B.M. NOTED
STRUCTURE NOTATIONS CHKD
NOTE BOOK
NO.
BY
DATE

FILE NAME = N:\AL CONDUIT\878273\878273.dgn\878273.BLSHT

CHRISTOPHER B. BURKE ENGINEERING, LTD.
2575 W. Higgins Road, Suite 500
Hoffman Estates, Illinois 60169
(847) 823-0500

USER NAME = psantos	DESIGNED - SNS	REVISED -	
	DRAWN - PWN	REVISED -	
PLOT SCALE = 40'	CHECKED - MEK	REVISED -	
PLOT DATE = 1/28/2015	DATE - 09/02/2011	REVISED -	

STATE OF ILLINOIS
DEPARTMENT OF TRANSPORTATION

HIGHLAND AVENUE PLAN AND PROFILE

SCALE: 1" = 20' | SHEET NO. OF SHEETS | STA. TO STA.

F.A. RTE.	SECTION	COUNTY	TOTAL SHEETS	SHEET NO.
		MCHENRY	27	1
CONTRACT NO.				
ILLINOIS FED. AID PROJECT				

EXHIBIT E-2.3a

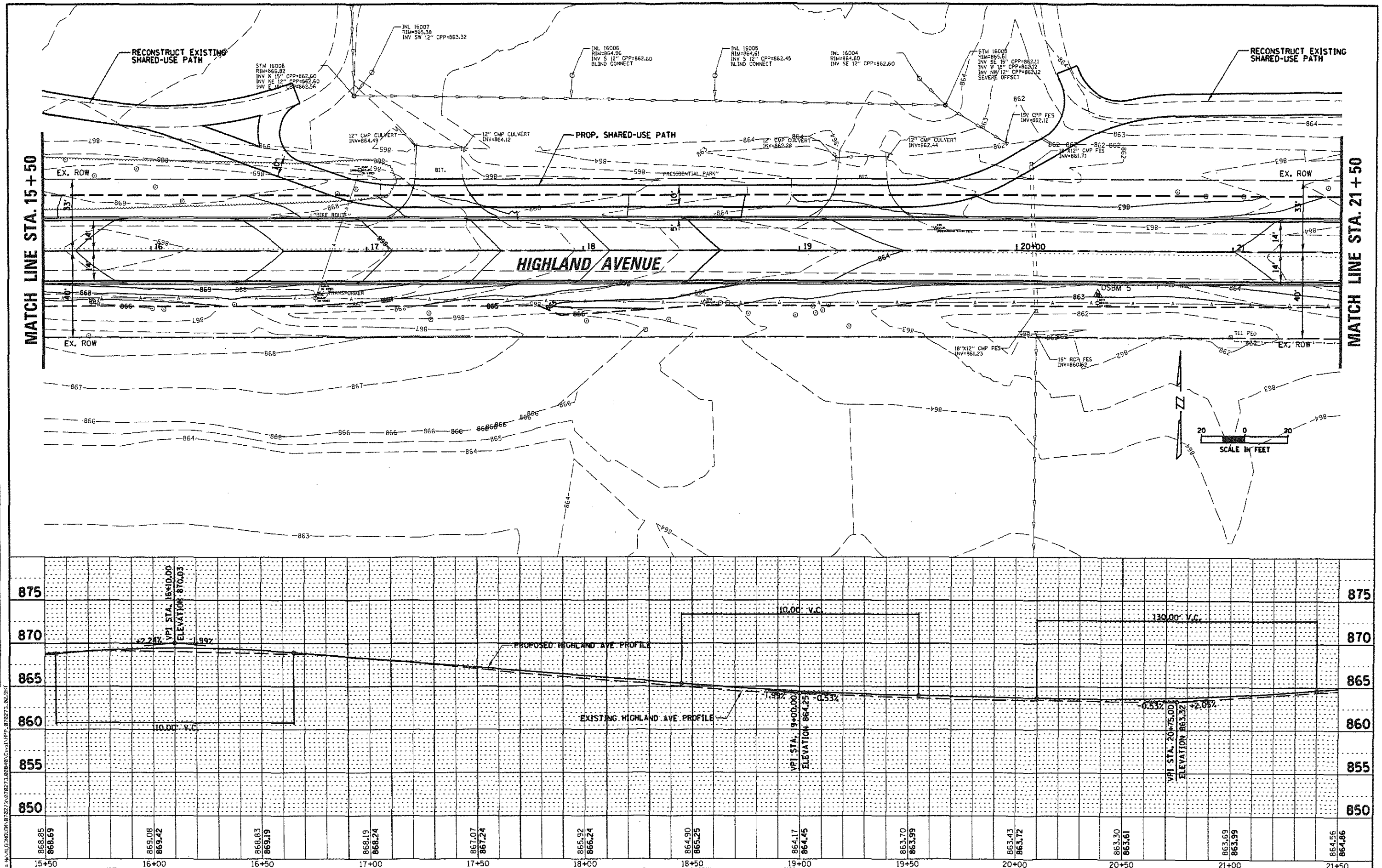

PLAN	BY	DATE
SURVEYED		
PLOTTED		
ALIGNMENT CHECKED		
RT. OF W'AY CHECKED		
NOTE BOOK		
NO.		

PROFILE	BY	DATE
SURVEYED		
PLOTTED		
GRADES CHECKED		
B.M. NOTED		
STRUCTURE NOTATIONS CHKD		
NOTE BOOK		
NO.		

FILE NAME = N:\ALGONQUIN\070273\070273.00\dgn\Civil\RPP-070273.02.SHT

CHRISTOPHER B. BURKE ENGINEERING, LTD.
9575 W. Higgins Road, Suite 600
Rosemont, Illinois 60018
(847) 823-0500

USER NAME = psantos	DESIGNED - SNS	REVISED -
	DRAWN - PWN	REVISED -
PLOT SCALE = 40'	CHECKED - MEK	REVISED -
PLOT DATE = 1/28/2015	DATE - 09/02/2011	REVISED -

STATE OF ILLINOIS
DEPARTMENT OF TRANSPORTATION

HIGHLAND AVENUE PLAN AND PROFILE

SCALE: 1" = 20' | SHEET NO. OF SHEETS | STA. TO STA.

F.A. RTE.	SECTION	COUNTY	TOTAL SHEETS	SHEET NO.
		MCHENRY	27	2
		CONTRACT NO.		
		ILLINOIS FED. AID PROJECT		

EXHIBIT E-2.3b

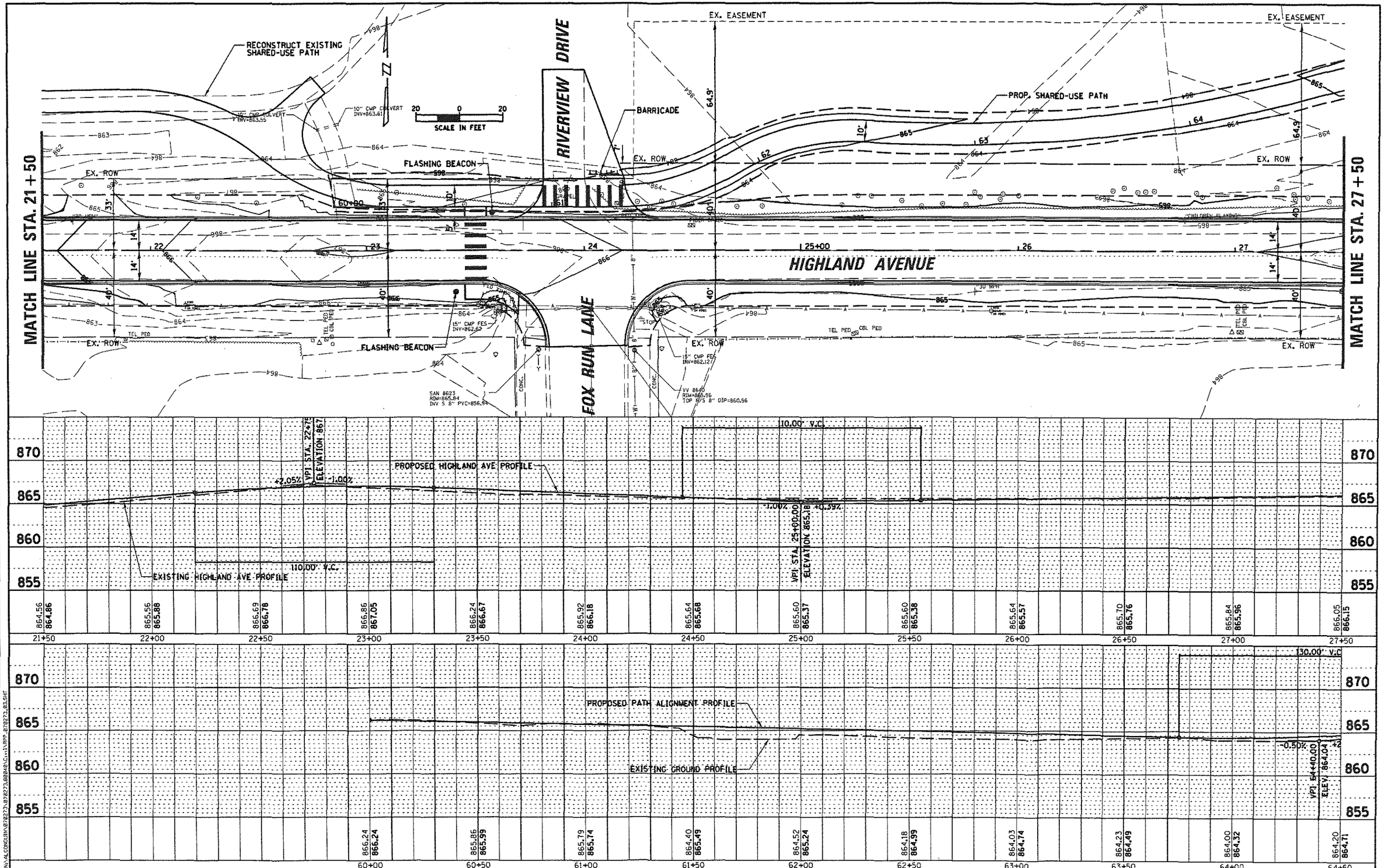

PLAN — SURVEYED / PLOTTED / ALIGNMENT CHECKED / GRADES CHECKED / BLM. NOTED / CADD FILE NAME / NOTE BOOK NO. / BY / DATE

PROFILE — SURVEYED / PLOTTED / GRADES CHECKED / BLM. NOTED / STRUCTURE NOTATIONS CHKD / NOTE BOOK NO. / BY / DATE

FILE NAME = N:\ALCONSULT\070273\070273.00848\Civil\RPP_070273_03.SHT

CHRISTOPHER B. BURKE ENGINEERING, LTD.
9575 W. Higgins Road, Suite 600
Rosemont, Illinois 60018
(847) 823-0500

USER NAME = psantos	DESIGNED - SNS	REVISED -	
	CHECKED - PWN	REVISED -	
PLOT SCALE = 40'	DRAWN - MEK	REVISED -	
PLOT DATE = 1/20/2015	CHECKED - 09/02/2011	REVISED -	

STATE OF ILLINOIS
DEPARTMENT OF TRANSPORTATION

HIGHLAND AVENUE PLAN AND PROFILE

SCALE: | SHEET NO. OF SHEETS | STA. TO STA.

F.A. RTE.	SECTION	COUNTY	TOTAL SHEETS	SHEET NO.
		MCHENRY	27	3
		CONTRACT NO.		
		ILLINOIS FED. AID PROJECT		

EXHIBIT E-2.3c

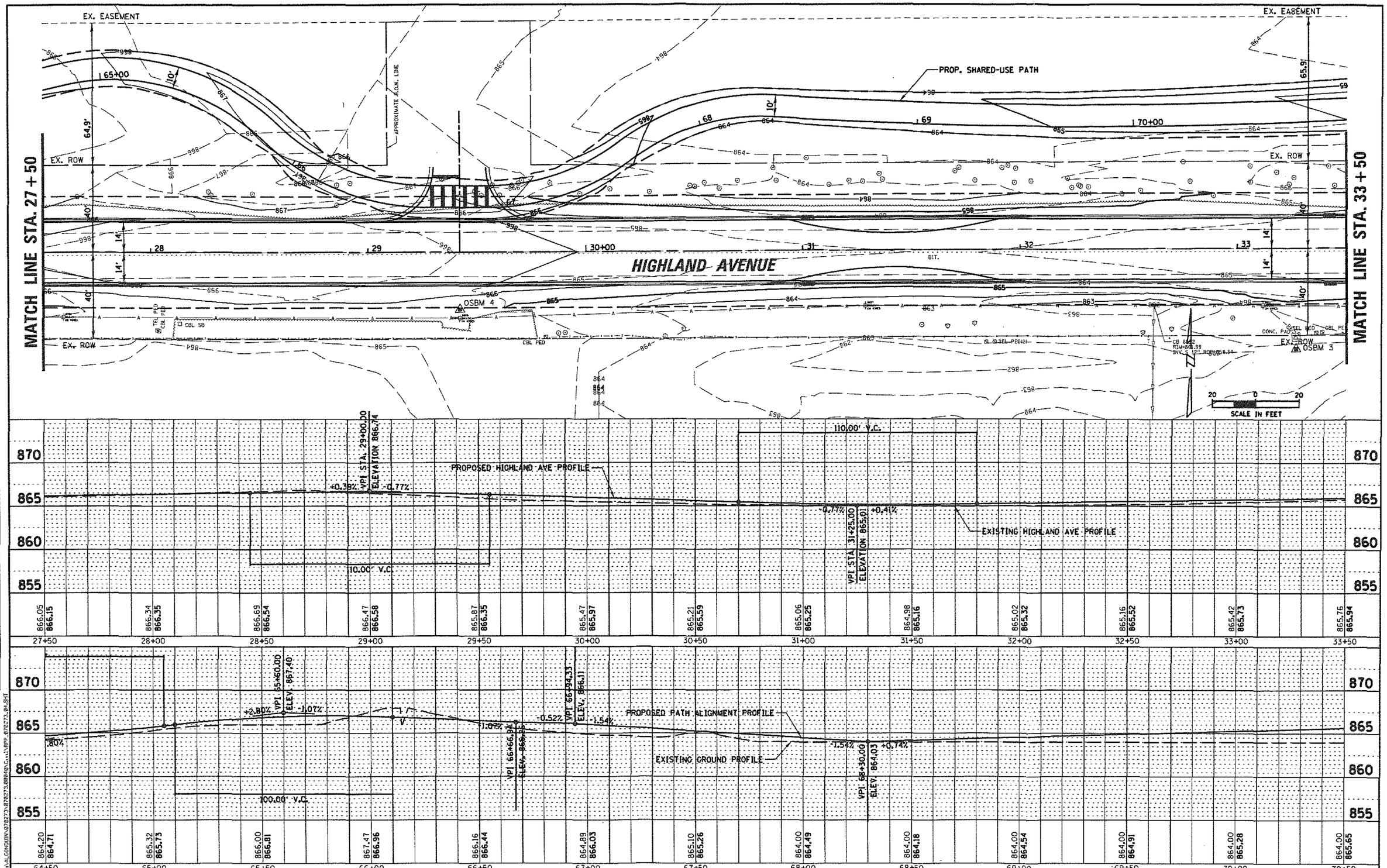

DATE	BY

PLAN — SURVEYED / PLOTTED / ALIGNMENT CHECKED / RT. OF WAY CHECKED / CADD FILE NAME — NOTE BOOK NO.

DATE	BY

PROFILE — SURVEYED / PLOTTED / GRADES CHECKED / STRUCTURE NOTATIONS CHKD — NOTE BOOK NO.

FILE NAME = N:\ALCONDJUN\072273\072273.00840\Cv1\RPP_072273.04.SHT

CHRISTOPHER B. BURKE ENGINEERING, LTD.
8575 W. Higgins Road, Suite 600
Rosemont, Illinois 60018
(847) 823-0500

USER NAME = psantos	DESIGNED - SNS	REVISED -	
	CHECKED - PWN	REVISED -	
PLOT SCALE = 40'	DRAWN - WEK	REVISED -	
PLOT DATE = 1/20/2015	CHECKED - 09/02/2011	REVISED -	

STATE OF ILLINOIS
DEPARTMENT OF TRANSPORTATION

HIGHLAND AVENUE PLAN AND PROFILE

SCALE: | SHEET NO. OF SHEETS | STA. TO STA.

F.A. RTE.	SECTION	COUNTY	TOTAL SHEETS	SHEET NO.
		MCHENRY	27	4
		CONTRACT NO.		
		ILLINOIS FED. AID PROJECT		

EXHIBIT E-2.3d

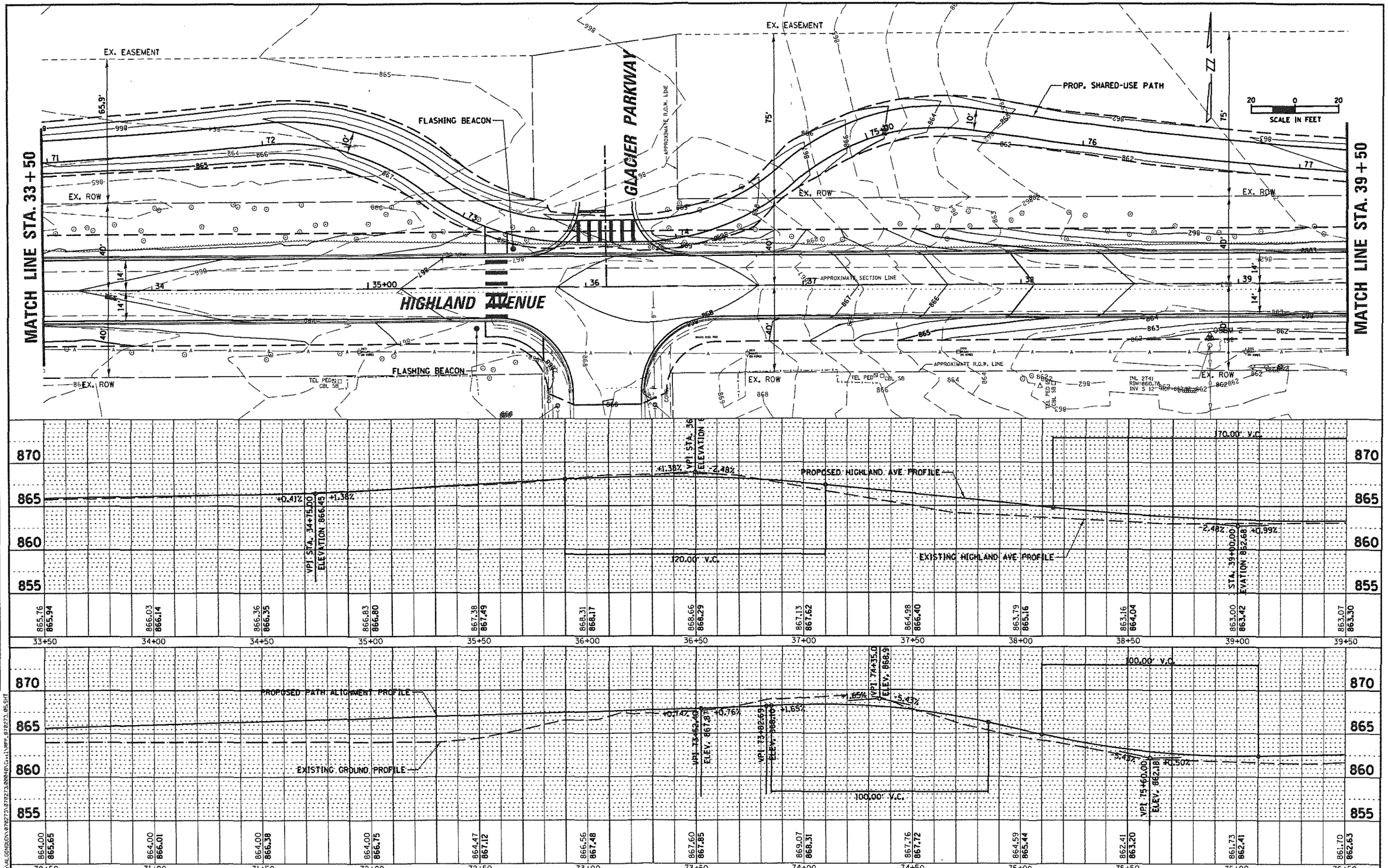

PLAN		
SURVEYED		
PLOTTED		
ALIGNMENT CHECKED		
RT. OF WAY CHECKED		
NOTE BOOK	LOAD FILE NAME	
NO.		

PROFILE		
SURVEYED		
PLOTTED		
GRADES CHECKED		
B.M. NOTED		
NOTE BOOK	STRUCTURE NOTATIONS CHKD	
NO.		

BY	DATE

FILE NAME = N:\ALGONQUIN\876273\876273.20B4\Civil\PRP_876273_B5.SHT

CHRISTOPHER B. BURKE ENGINEERING, LTD.
9575 W. Higgins Road, Suite 600
Rosemont, Illinois 60018
(847) 823-0500

USER NAME = psantos	DESIGNED - SNS	REVISED -	
	CHECKED - PWN	REVISED -	
PLOT SCALE = 40'	DRAWN - MEK	REVISED -	
PLOT DATE = 1/28/2015	CHECKED - 09/02/2011	REVISED -	

STATE OF ILLINOIS
DEPARTMENT OF TRANSPORTATION

HIGHLAND AVENUE PLAN AND PROFILE

SCALE: | SHEET NO. OF SHEETS | STA. TO STA.

F.A. RTE.	SECTION	COUNTY	TOTAL SHEETS	SHEET NO.
		MCHENRY	27	5
		CONTRACT NO.		
		ILLINOIS FED. AID PROJECT		

EXHIBIT E-2.3e

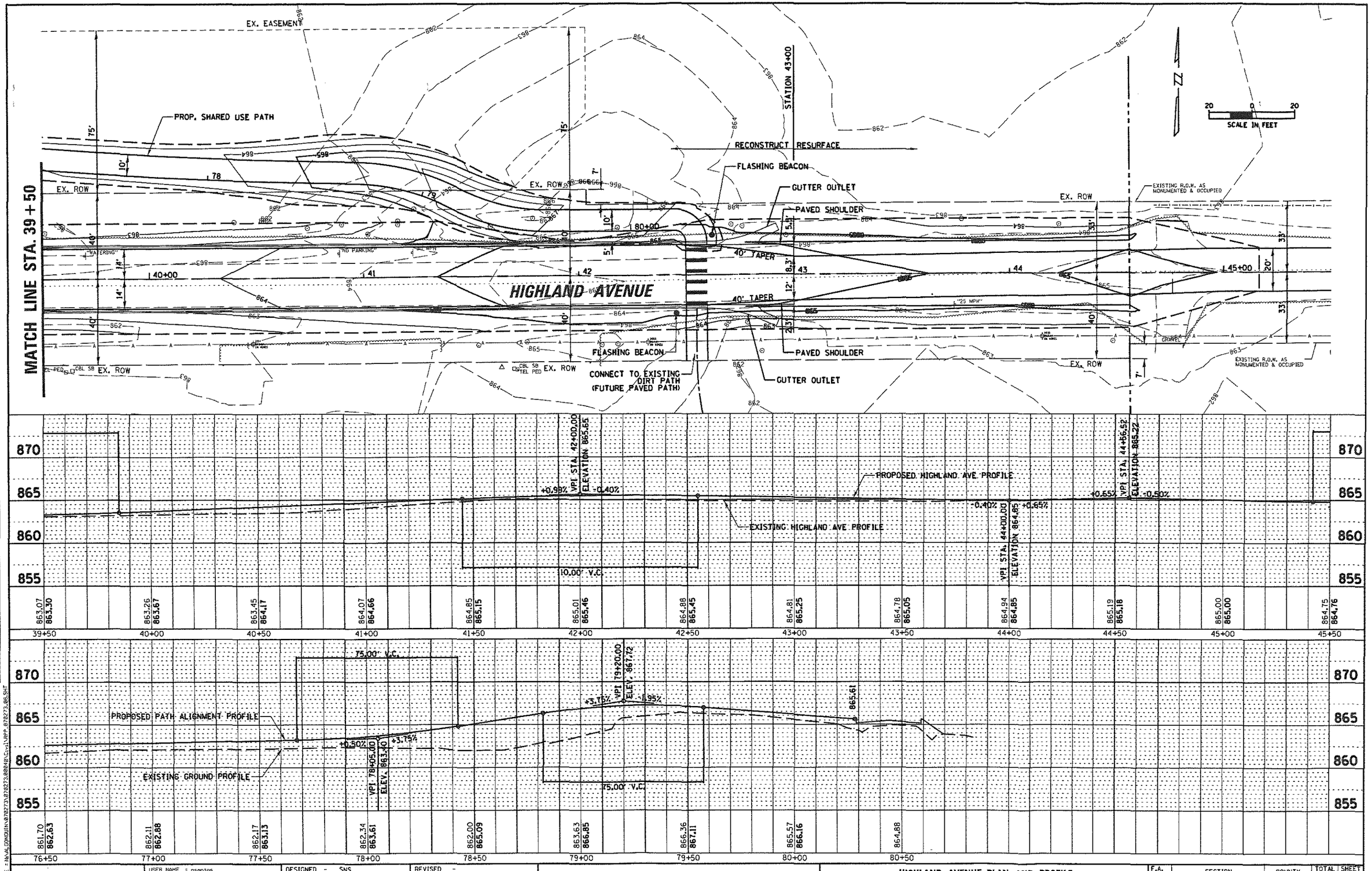

CHRISTOPHER B. BURKE ENGINEERING, LTD.
9575 W. Higgins Road, Suite 600
Rosemont, Illinois 60018
(847) 823-0500

USER NAME = psantos	DESIGNED - SNS	REVISED -	
	CHECKED - PWN	REVISED -	
PLOT SCALE = 40'	DRAWN - MEK	REVISED -	
PLOT DATE = 1/20/2015	CHECKED - 09/02/2011	REVISED -	

STATE OF ILLINOIS
DEPARTMENT OF TRANSPORTATION

HIGHLAND AVENUE PLAN AND PROFILE

SCALE: | SHEET NO. OF SHEETS | STA. TO STA.

F.A. RTE.	SECTION	COUNTY	TOTAL SHEETS	SHEET NO.
		MCHENRY	27	6
		CONTRACT NO.		
		ILLINOIS FED. AID PROJECT		

EXHIBIT E-2.3f

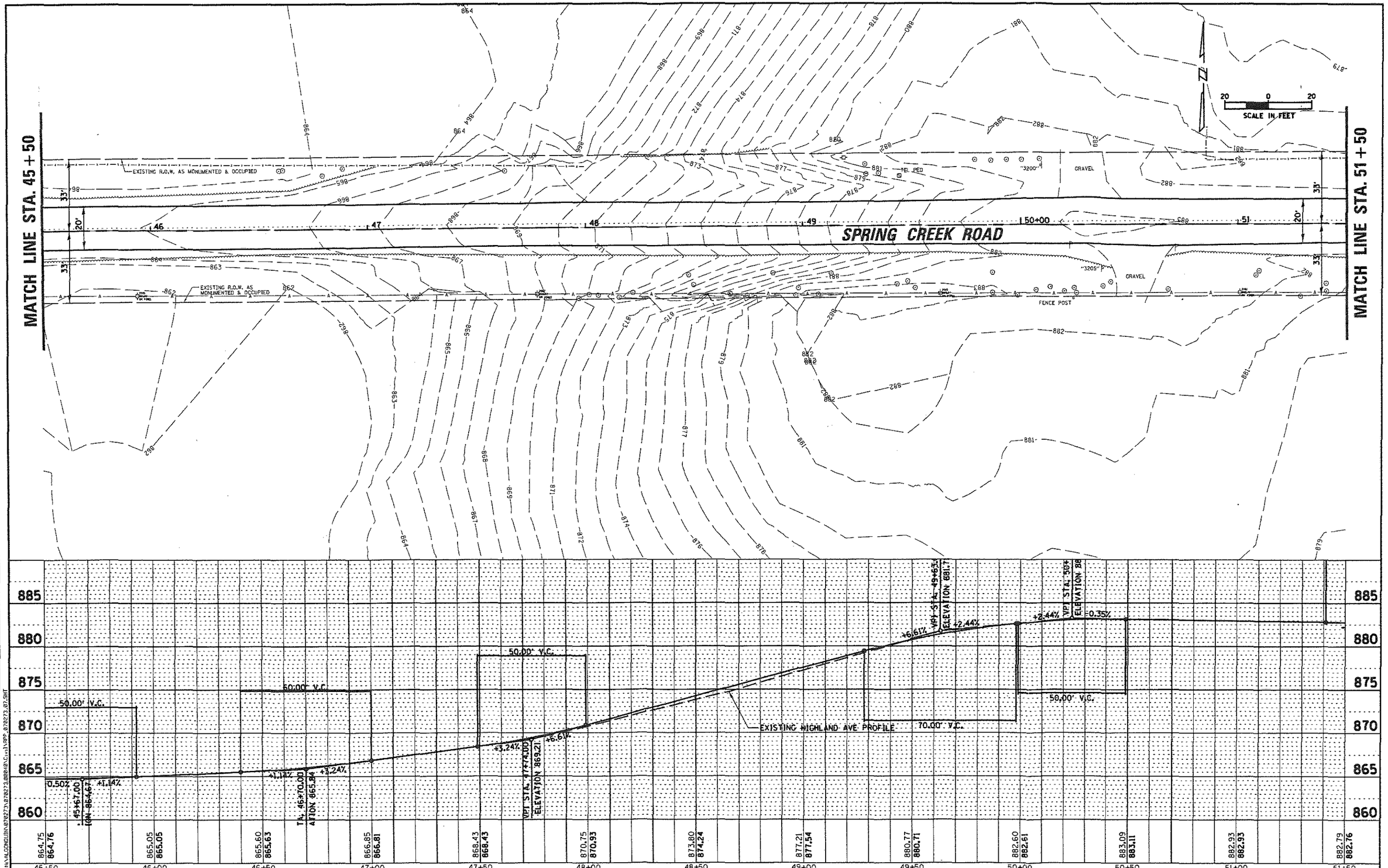

PLAN
SURVEYED
PLOTTED
ALIGNMENT CHECKED
RT. OF WAY CHECKED
CADD FILE NAME
NOTE BOOK NO.
BY
DATE

PROFILE
SURVEYED
PLOTTED
GRADES CHECKED
B.M. NOTED
STRUCTURE NOTATNS CHKD
NOTE BOOK NO.
BY
DATE

FILE NAME = H:\ALGONQUIN\070273\070273.0804\Civil\RPP_070273_07.SHT

CHRISTOPHER B. BURKE ENGINEERING, LTD.
9575 W. Higgins Road, Suite 500
Rosemont, Illinois 60018
(847) 823-0500

USER NAME = psantos	DESIGNED - SNS	REVISED -	
	DRAWN - PWN	REVISED -	
PLOT SCALE = 40'	CHECKED - MEK	REVISED -	
PLOT DATE = 1/28/2015	DATE - 09/02/2011	REVISED -	

STATE OF ILLINOIS
DEPARTMENT OF TRANSPORTATION

HIGHLAND AVENUE PLAN AND PROFILE

SCALE: 1" = 20' | SHEET NO. OF SHEETS | STA. TO STA.

F.A. RTE.	SECTION	COUNTY	TOTAL SHEETS	SHEET NO.
		MCHENRY	27	7
	CONTRACT NO.			
	ILLINOIS FED. AID PROJECT			

EXHIBIT E-2.3g

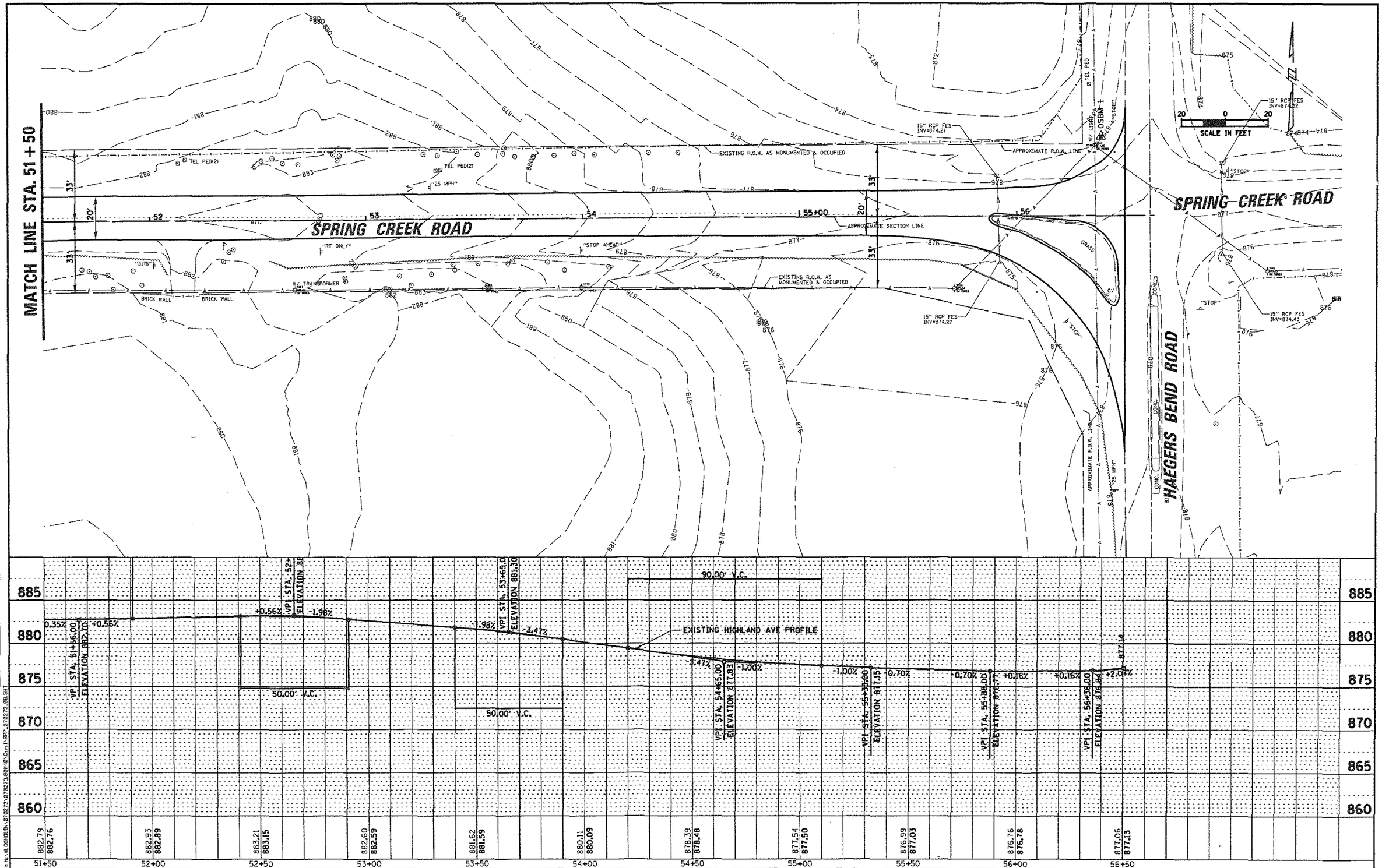

PLAN	DATE	BY
SURVEYED		
PLOTTED		
ALIGNMENT CHECKED		
RT. OF WAY CHECKED		
NOTE BOOK		
CADD FILE NAME		
NO.		

PROFILE	DATE	BY
SURVEYED		
PLOTTED		
GRADES CHECKED		
BAL. NOTED		
STRUCTURE NOTATIONS CHKD		
NOTE BOOK		
NO.		

FILE NAME = N:\ALGONQUIN\B78273\B78273.B0\48\Civil\RPP_B78273_B0.SHT

CHRISTOPHER B. BURKE ENGINEERING, LTD.
5575 W. Higgins Road, Suite 500
Rosemont, Illinois 60016
(847) 823-0500

USER NAME = psantos	DESIGNED - SNS	REVISED -	
	DRAWN - PWN	REVISED -	
PLOT SCALE = 40'	CHECKED - MEK	REVISED -	
PLOT DATE = 1/28/2015	DATE - 09/02/2011	REVISED -	

STATE OF ILLINOIS
DEPARTMENT OF TRANSPORTATION

HIGHLAND AVENUE PLAN AND PROFILE

SCALE: 1" = 20' | SHEET NO. OF SHEETS | STA. TO STA.

F.A. RTE.	SECTION	COUNTY	TOTAL SHEETS	SHEET NO.
		MCHENRY	27	8
		CONTRACT NO.		
	ILLINOIS	FED. AID PROJECT		

EXHIBIT E-2.3h